"The ART of Noise Control"

For your local ArtUSA Representative
Call: 1-888-454-6973
Internet: www.artusaindustries.us

Sound Attenuator

NO. 802-03

CERTIFIED
ENGINEERING DATA SHEET

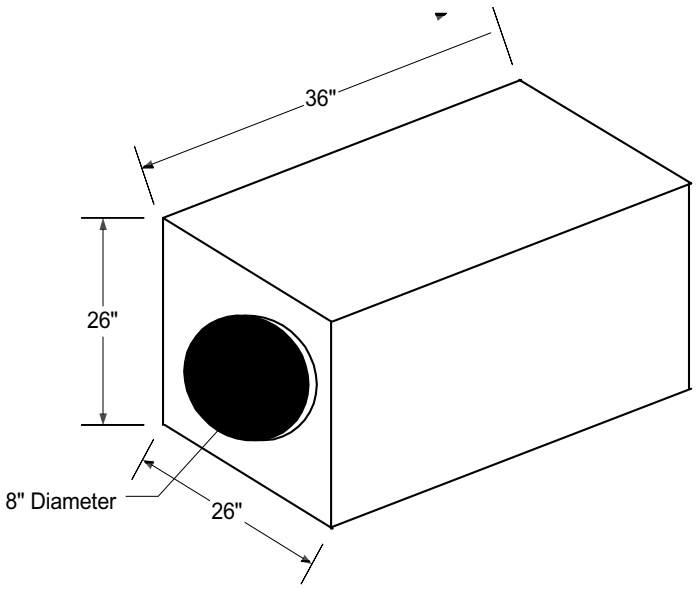

MODEL 8CNF-LP

CIRCULAR NO-FILL LOW PRESSURE LOSS

NOMENCLATURE EXAMPLE

INLET	LENGTH	MODEL
8	36	8CNF-LP

ArtUSA Acoustics sound attenuators are engineered to achieve a maximum insertion loss and a minimum pressure drop **ArtUSA Acoustics** sound attenuators feature airfoil design for efficient aerodynamic performance, as well as superior acoustical materials and total galvanized steel construction guaranteeing excellent reliability and performance. DIL is achieved by use of tuned resonators. No acoustical fill is used.

TABLE I

OCTAVE BAND	(1)	(2)	(3)	(4)	(5)	(6)	(7)	(8)
CENTER FREQUENCY, Hz	63	125	250	500	1000	2000	4000	8000
SILENCER FACE VELOCITY, fpm	DYNAMIC INSERTION LOSS IN DECIBELS							
-2000	4	15	30	9	9	9	8	6
-1000	3	14	28	9	8	9	8	6
0	3	13	27	8	8	9	8	6
+1000	6	14	29	8	8	8	8	5
+2000	3	14	29	9	8	9	8	5

TABLE II

OCTAVE BAND	(1)	(2)	(3)	(4)	(5)	(6)	(7)	(8)
CENTER FREQUENCY, Hz	63	125	250	500	1000	2000	4000	8000
SILENCER FACE VELOCITY, fpm	SELF-NOISE SOUND POWER LEVELS, dB re: 10^{-12} WATTS							
-2000	64*	57	48	44	43	39	36	33
-1000	66*	52*	42	35	27	24*	27*	29*
+1000	67	53*	45	31	22	22*	25*	29*
+2000	66	56	50	44	42	37	30	31*

* Denotes data that has reached ambient levels in the test room or is determined by instrument limitations. Actual levels are less than or equal to the level shown.

Static Pressure Loss, Model 8CNF-LP = 0.007 in.wc. @ 1000 fpm face velocity

Actual fpm = Actual CFM ÷ 0.349 square feet.

For intermediate velocities: $\left(\frac{\text{ActualVelocity}}{1000}\right)^2$ x 0.007 in. wc. = Actual Pressure Loss

THESE TABLES CONTAIN BOTH FORWARD(+) AND REVERSE(-) FLOW ACOUSTIC AND AERODYNAMIC RATINGS WHICH ARE THE TEST RESULTS FROM AN INDEPENDENT NVLAP CERTIFIED LABORATORY MEASURED IN ACCORDANCE WITH ASTM E477-99. COPIES OF THESE TEST REPORTS CAN BE FURNISHED UPON REQUEST.